DRAWING NO: 0-35-211-13975

FOR TOLERANCES OF UNTOLERANCED DIMENSIONS DURING MANUFACTURE REFER PLANT STD. NO TP 023 0299

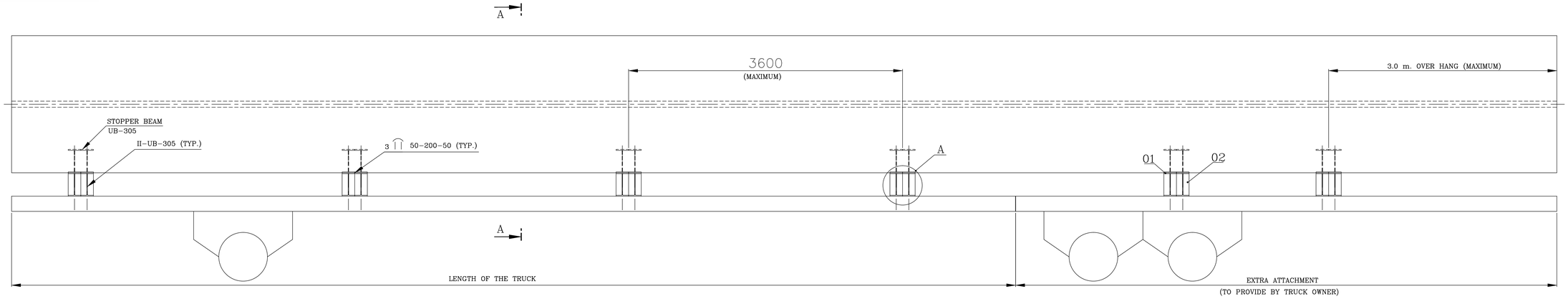

TRANSPORTATION BEAMS FOR 250 MW CEILING GIRDER

(FOR AD OPERATION & SHIPPING)

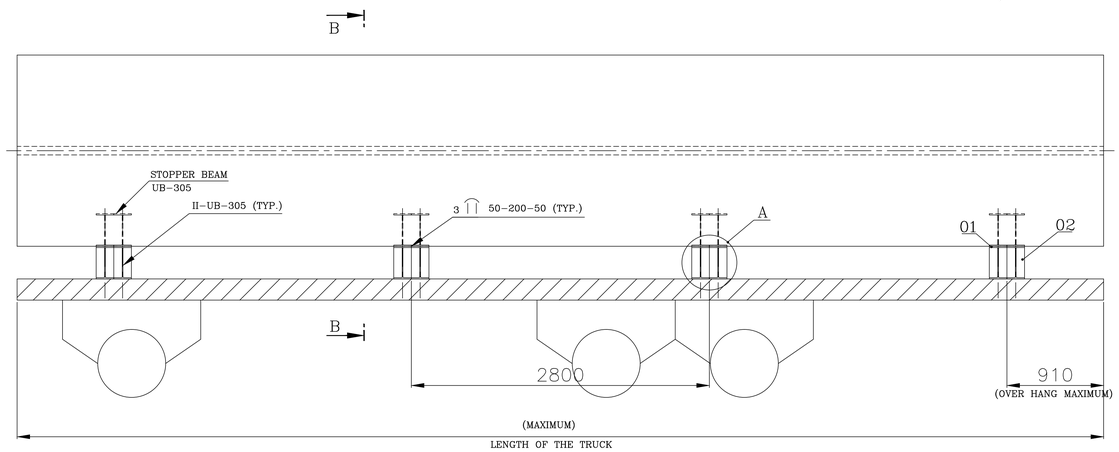

TRANSPORTATION BEAMS FOR 500MW/600MW/660MW/700MW/800MW CEILING GIRDER

(FOR AD OPERATION & SHIPPING)

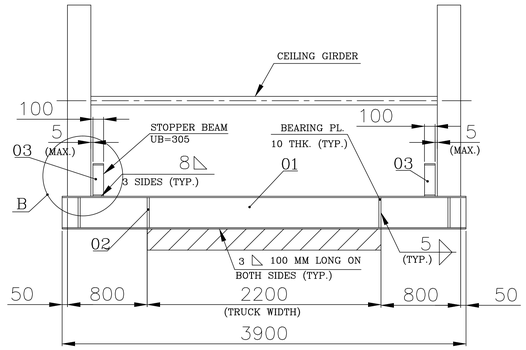

3.800M HEIGHT CEILING GIRDER (FOR 500MW/600MW.) SECTION–BB

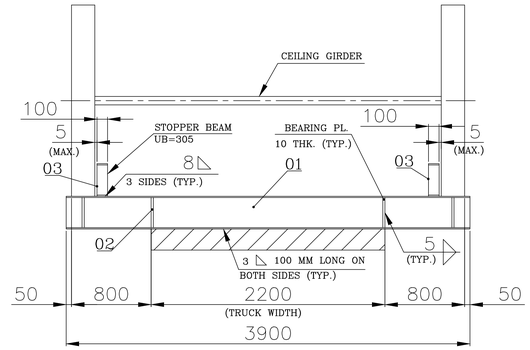

3.800M HEIGHT CEILING GIRDER SECTION–AA

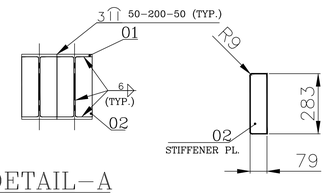

DETAIL–A

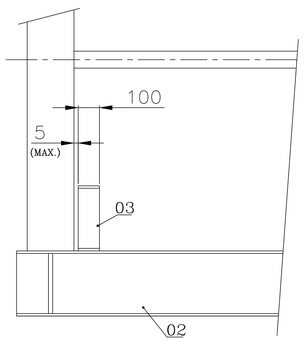

DETAIL–B

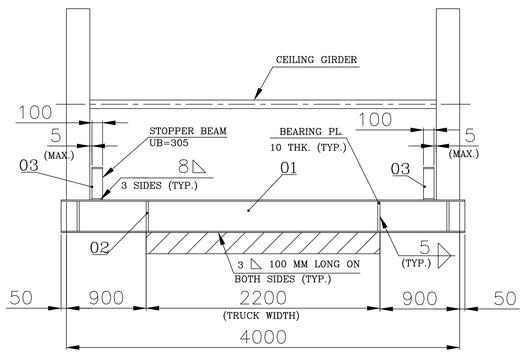

4.000M HEIGHT CEILING GIRDER (FOR 660MW/700MW/800MW.) SECTION–BB

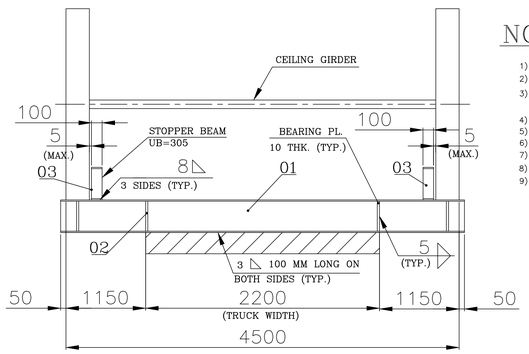

4.500M HEIGHT CEILING GIRDER (FOR 660MW/700MW/800MW.) SECTION–BB

LEGEND :–

NOTES:–

1) MATERIALS, WELDS AND OTHER REQUIREMENTS ARE GIVEN PER BOILER ONLY
2) MANUFACTURING REQUIREMENTS SHALL BE DONE AS PER RELEVANT Q.C.P.
3) ALL THE LEVELS INDICATED IN THIS DRG. REPRESENTS THE TOP OF STEEL UNLESS OTHERWISE NOTED
4) SUITABLE WIRE LASHES ARE TO BE PROVIDED OVER THE GIRDER , TO TIGHTEN THE GIRDER WITH TRUCK.
5) IF LENGTH OF CEILING GIRDER Upto 8 m. NUMBER OF SUPPORTS ARE 3.
6) IF LENGTH OF CEILING GIRDER 10 TO 12 m. NUMBER OF SUPPORTS ARE 4.
7) IF LENGTH OF CEILING GIRDER 12 TO 16 m. NUMBER OF SUPPORTS ARE 5.
8) IF LENGTH OF CEILING GIRDER > 16 m. NUMBER OF SUPPORTS ARE 6.
9) THIS UB–305 BEAMS USED FOR TRANSPORTATION OF CEILING GIRDER RELEASED IN PGMA 35–211, 35–212 DU No. 999 IS TO BE USED AS ERECTION MATERIALS AT SITE.

VARIANT NUMBER	ITEM NUMBER	DESCRIPTION	STD	DRAWING NUMBER	ITEM NO / VAR NO	MATERIAL CODE / MATERIAL SPECN	A/C/P / DI	UNIT WEIGHT / QUANTITY	SG / ZONE
	03	UB 305X165				15009049		4.610	
		100				IS2062Fe410B		4	
	02	PLATE 10				15011098		1.743	
		79 X 281				IS2062Fe410A		16	
	01	UB 305X165				15009049		212.060	
		4600				IS2062Fe410B		2	

REV	DATE	ALTERED : K.S.PANDIAN	REV	DATE	ALTERED MENAGA/GANESAN
02	12/03/14	CHD & APPD : D.V.N	01	26.12.13	CHD & APPD : J.SOMU
ZONE	IT.NO: 03 ADDED		ZONE H2	SITE WELD MODIFIED AS SHOP WELD.	

CAUTION: The information on this document is the property of BHEL and it should not be used directly or indirectly in any way detrimental to the interest of the company.

TYPE OF PRODUCT OR NAME OF CUSTOMER/PROJECT

Bharat Heavy Electricals Ltd
UNIT: HIGH PRESSURE BOILER PLANT
TIRUCHIRAPALLI – 620014

	NAME	SIGNATURE	DATE
DRN	P. Ramachandran		11–01–13
CHD	A. Ganesan		11–01–13
APPD	D. Viswanathan		11–01–13

355–052 | DEPT ST | CODE 122 | ALL DIMENSIONS ARE IN MM | PROJECTION | SCALE 1:50 | WEIGHT (Kg) | REF TO ASSY / OLD DWG

TITLE: TRANSPORT MATERIAL ARRANGEMENT FOR CEILING GIRDER

DRAWING NO : 0–35–211–13975 | REV 02

0-35-211-21642

DRAWING NO

FOR TOLERANCES OF UNTOLERANCED DIMENSIONS DURING MANUFACTURE REFER PLANT STD. NO TP-023 0299

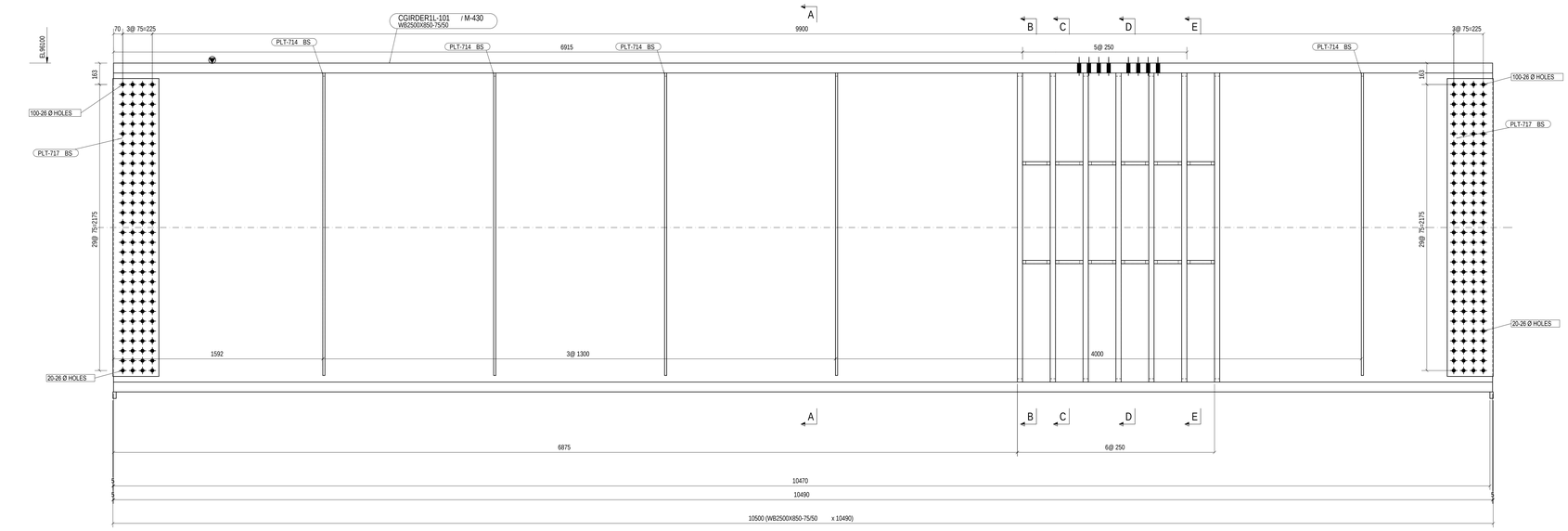

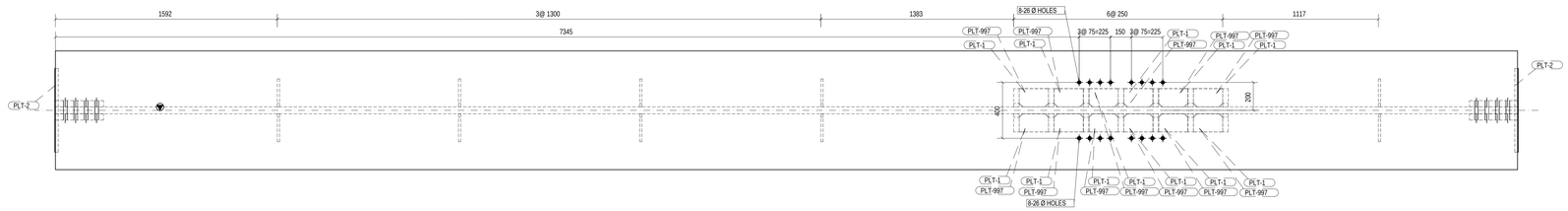

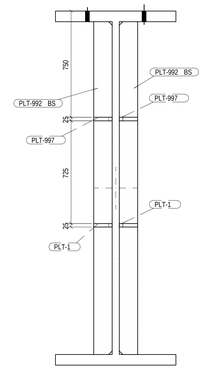

C - C

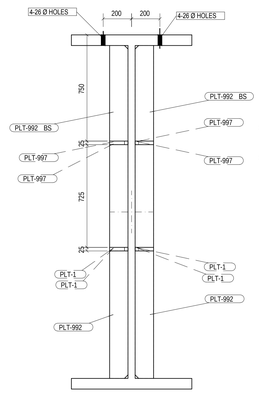

D - D

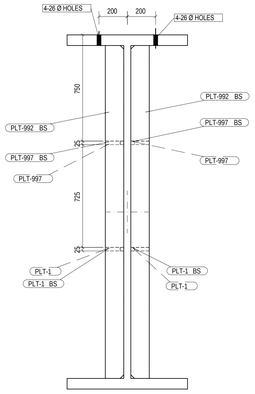

E - E

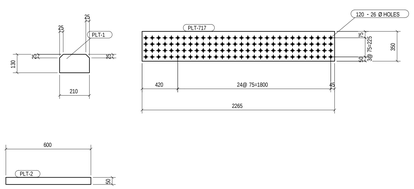

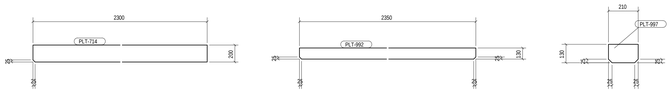

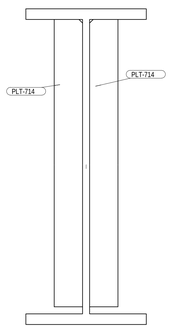

A - A

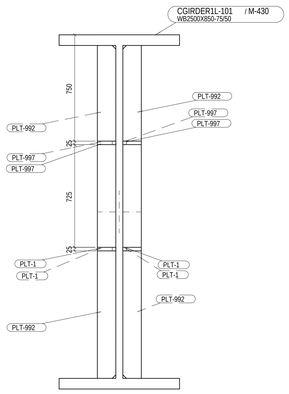

B - B

NOTES:-

FOR ASSEMBLY DRAWING REFER PRINCIPAL DRAWING MENTIONED IN GMS

VARIANT NUMBER / ITEM NUMBER	DESCRIPTION	STD	DRAWING NUMBER	ITEM NO / VAR NO	MATERIAL CODE / MATERIAL SPECN	UNIT / DI	UNIT WEIGHT / QUANTITY	C/G / ZONE
12	LIFTING EYE		3-35-211-05087			No	26.795 / 8	
11	NUT HEX Gr.C M24				4130400024	No	0.110 / 6	
10	BOLT HEX Gr.C M24x200.0				4122124200	No	0.812 / 6	
9	PLATE-25 130.0x210.0		PLT-997		15-011-081 IS2062E250B(Fe410W)	No	5.235 / 32	
8	PLATE-40 130.0x350.0		PLT-992		15-011-184 IS2062E250B(Fe410W)	No	95.731 / 24	
7	PLATE-45 350.0x2265.0		PLT-717		15-011-001 IS2062E250B(Fe410W)	No	280.039 / 4	
6	PLATE-16 200.0x2300.0		PLT-714		15-011-026 IS2062E250A(Fe410W)	No	57.737 / 10	
5	PLATE-25 50.0x600.0		PLT-2		15-011-081 IS2062E250B(Fe410W)	No	5.887 / 2	
4	PLATE-25 130.0x210.0		PLT-1		15-011-081 IS2062E250B(Fe410W)	No	5.235 / 32	
3	PLATE-50 2350x10490		M-430xWEB		15-011-052 IS2062 E350B0	No	9675.714 / 1	
2	PLATE-75 850X10490		M-430xTFL		15-911-067 BSEN10025 3GS420N	No	5249.589 / 1	
1	PLATE-75 850X10490		M-430xBFL		15-911-067 BSEN10025 3GS420N	No	5249.589 / 1	

CAUTION: The information on this document is the property of BHARAT HEAVY ELECTRICALS LTD and shall be used directly or indirectly in any way prejudicial to the interests of the company.

TYPE OF PRODUCT
OR NAME OF
CUSTOMER/PROJECT

Bharat Heavy Electricals Ltd
UNIT: HIGH PRESSURE BOILER PLANT
TIRUCHIRAPALLI - 620014

	NAME	SIGNATURE	DATE
DRN	SHAMNA RAJ.P		29.03.2017
CHD	SARASHJIT		30.03.2017
APPD	J SOMU		31.03.2017

DRFT ST | CODE 122 | ALL DIMENSIONS ARE IN MM | PROJECTION | SCALE NTS | WEIGHT (Kg) 23347.673 | REF TO 4-0257 / OLD DWG

TITLE: CGIRDER1L-101

DRAWING NO : 0-35-211-21642 | REV

1 No. REQUIRED AS DRAWN MARKED. CGIRDER1L-101

DRAWING NO: 0-35-211-21644

FOR TOLERANCES OF UNTOLERANCED DIMENSIONS DURING MANUFACTURE REFER PLANT STD. NO TP-023 0299

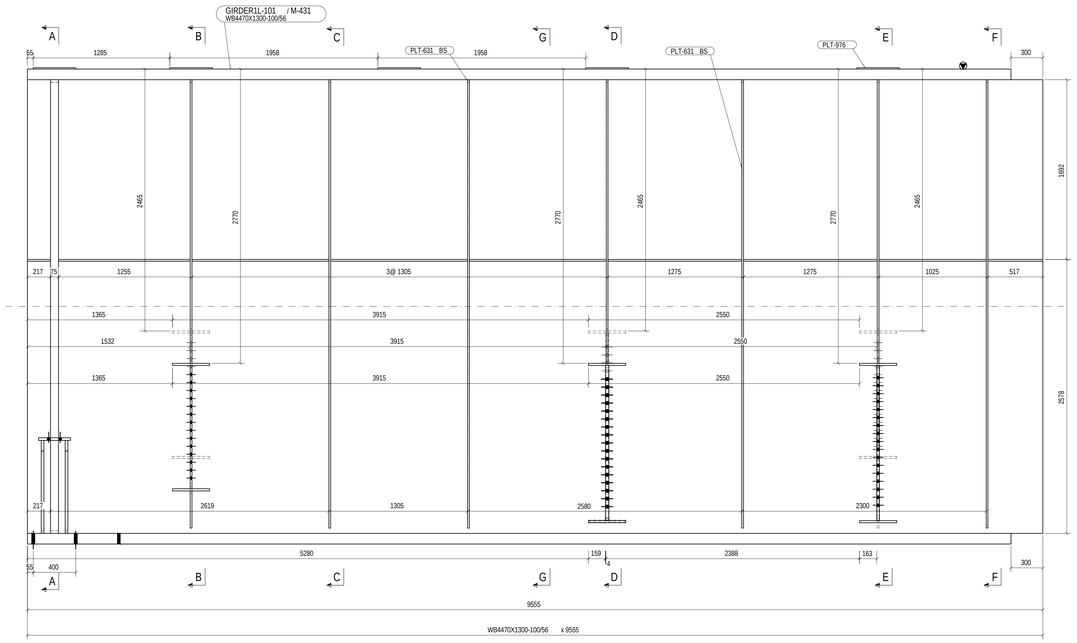

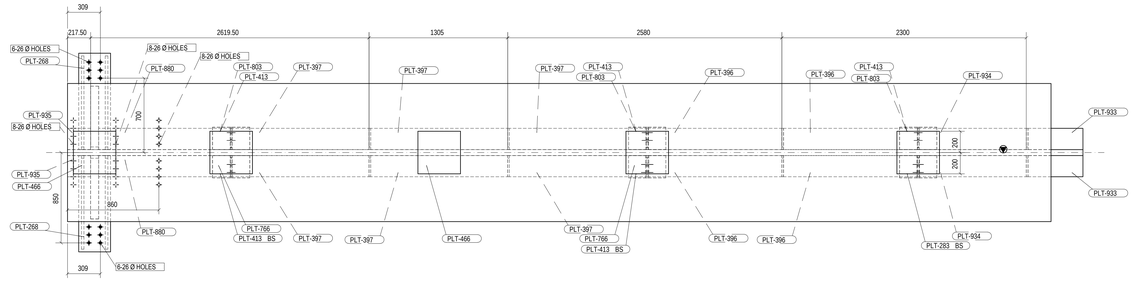

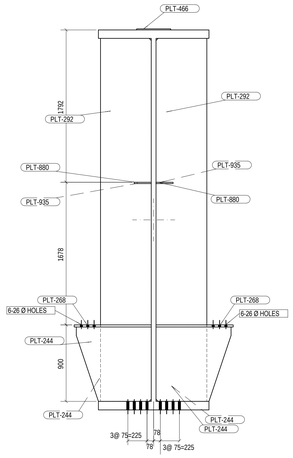

A - A

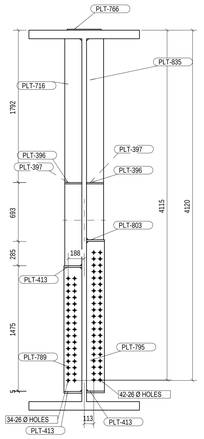

D - D

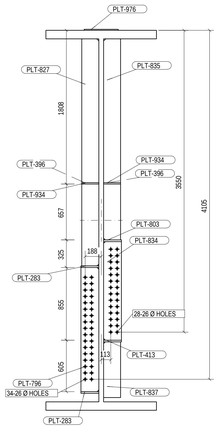

E - E

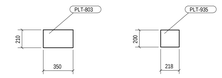

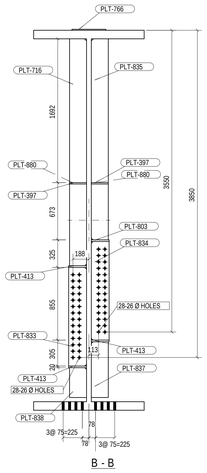

B - B

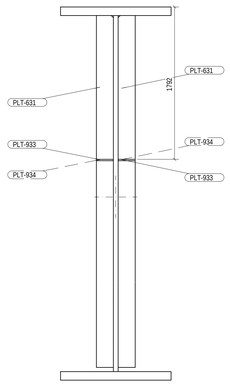

F - F

NOTES:-

FOR ASSEMBLY DRAWING REFER PRINCIPAL DRAWING MENTIONED IN GMS

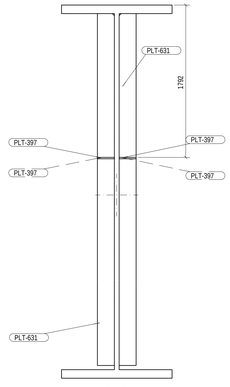

G - G

C - C

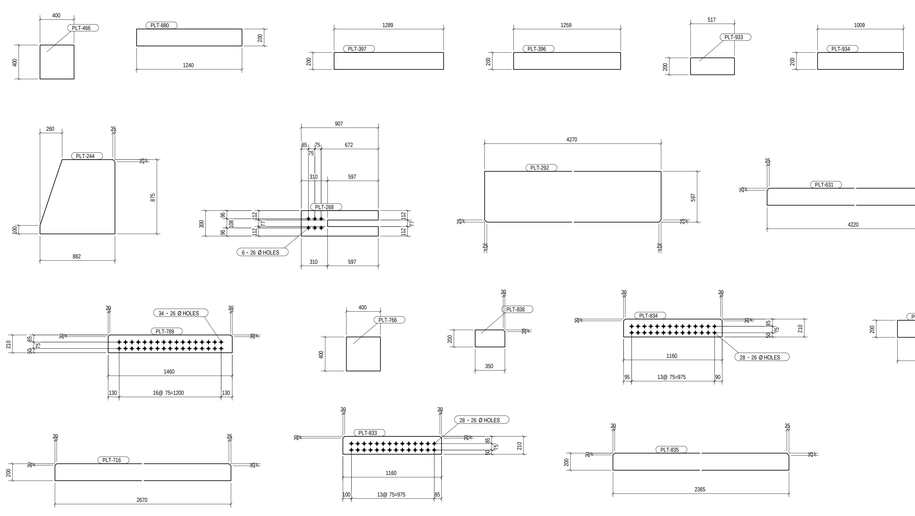

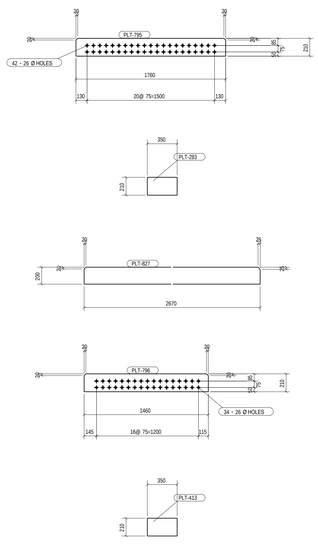

	31	END COVERING DETAIL FOR END PIECE	3-35-211-02772			No	457.500			
	30	LIFTING EYE	3-35-211-05087			No	26.795			
	29	PLATE-12 400.0x400.0	PLT-976	15-011-132 IS2062:E250AFe410(W)		No	15.072			
	28	PLATE-10 200.0x218.0	PLT-935	15-011-026 IS2062:E250AFe410(W)		No	5.464			
	27	PLATE-16 200.0x1009.0	PLT-934	15-011-026 IS2062:E250AFe410(W)		No	25.346			
	26	PLATE-16 200.0x517.0	PLT-933	15-011-026 IS2062:E250AFe410(W)		No	12.987			
	25	PLATE-16 200.0x1240.0	PLT-880	15-011-026 IS2062:E250AFe410(W)		No	31.136			
	24	PLATE-10 200.0x350.0	PLT-838	15-011-026 IS2062:E250AFe410(W)		No	8.767			
	23	PLATE-16 200.0x655.0	PLT-837	15-011-026 IS2062:E250AFe410(W)		No	16.428			
	22	PLATE-16 200.0x2465.0	PLT-835	15-011-026 IS2062:E250AFe410(W)		No	59.344			
	21	PLATE-16 210.0x1160.0	PLT-834	15-011-026 IS2062:E250AFe410(W)		No	30.546			
	20	PLATE-16 210.0x1160.0	PLT-833	15-011-026 IS2062:E250AFe410(W)		No	30.546			
	19	PLATE-16 200.0x2670.0	PLT-827	15-011-026 IS2062:E250AFe410(W)		No	67.006			
	18	PLATE-20 210.0x350.0	PLT-803	15-011-150 IS2062:E250AFe410(W)		No	11.539			
	17	PLATE-25 210.0x1460.0	PLT-796	15-011-081 IS2062:E250BFe410(W)		No	60.092			
	16	PLATE-25 210.0x1760.0	PLT-795	15-011-081 IS2062:E250BFe410(W)		No	72.455			
	15	PLATE-32 210.0x1460.0	PLT-789	15-011-130 IS2062:E250BFe410(W)		No	76.917			
	14	PLATE-12 400.0x400.0	PLT-766	15-011-132 IS2062:E250AFe410(W)		No	15.072			
	13	PLATE-16 200.0x2670.0	PLT-716	15-011-026 IS2062:E250AFe410(W)		No	67.006			
	12	PLATE-10 200.0x420.0	PLT-631	15-011-026 IS2062:E250AFe410(W)		No	105.967			
	11	PLATE-12 400.0x400.0	PLT-466	15-011-132 IS2062:E250AFe410(W)		No	15.072			
	10	PLATE-20 210.0x350.0	PLT-413	15-011-150 IS2062:E250AFe410(W)		No	11.539			
	9	PLATE-16 200.0x1289.0	PLT-397	15-011-026 IS2062:E250AFe410(W)		No	32.380			
	8	PLATE-16 200.0x1259.0	PLT-396	15-011-026 IS2062:E250AFe410(W)		No	31.626			
	7	PLATE-75 597.0x4270.0	PLT-292	15-011-718 IS2062:E250BFe410		No	1500.468			
	6	PLATE-20 210.0x350.0	PLT-283	15-011-150 IS2062:E250AFe410(W)		No	11.539			
	5	PLATE-25 300.0x907.0	PLT-268	15-011-081 IS2062:E250BFe410(W)		No	44.378			
	4	PLATE-25 875.0x882.0	PLT-244	15-011-081 IS2062:E250BFe410(W)		No	131.622			
	3	PLATE-25 4270x9555	M-431xWEB	15-011-216 IS2062:E250BFe410(W)		No	17935.614			
	2	PLATE-100 1300X9255	M-431xTFL	15-911-968 BSEN10025_3G-S420N		No	3444.728			
	1	PLATE-100 1300X9255	M-431xBFL	15-911-968 BSEN10025_3G-S420N		No	3444.728			
VARIANT NUMBER	ITEM NUMBER	DESCRIPTION	STD	DRAWING NUMBER	ITEM NO / VAR NO	MATERIAL CODE / MATERIAL SPECN	AUXP / DI	UNIT / QUANTITY	UNIT WEIGHT / QUANTITY	CL / ZONE

CAUTION: The information on this document is the property of BHARAT HEAVY ELECTRICALS LTD and must not be used directly or indirectly in any way detrimental to the interest of the company.

TYPE OF PRODUCT
OR NAME OF
CUSTOMER/PROJECT

Bharat Heavy Electricals Ltd
UNIT : HIGH PRESSURE BOILER PLANT
TIRUCHIRAPALLI - 620014

	NAME	SIGNATURE	DATE
DRN	SHAMNA RAJ.P		28.03.2017
CHD	SARASHJIT		30.03.2017
APPD	J SOMU		31.03.2017

DEPT: ST | COST: 122 | ALL DIMENSIONS ARE IN MM | PROJECTION | SCALE: NTS | WEIGHT (Kg): 42692.064 | REF TO ASSY / OLD DWG

TITLE: GIRDER1L-101

DRAWING NO : 0-35-211-21644 | REV

1 No. REQUIRED AS DRAWN MARKED. GIRDER1L-101

0-35-211-21645 DRAWING NO

FOR TOLERANCES OF UNTOLERANCED DIMENSIONS DURING MANUFACTURE REFER PLANT STD. NO TP-023 0299

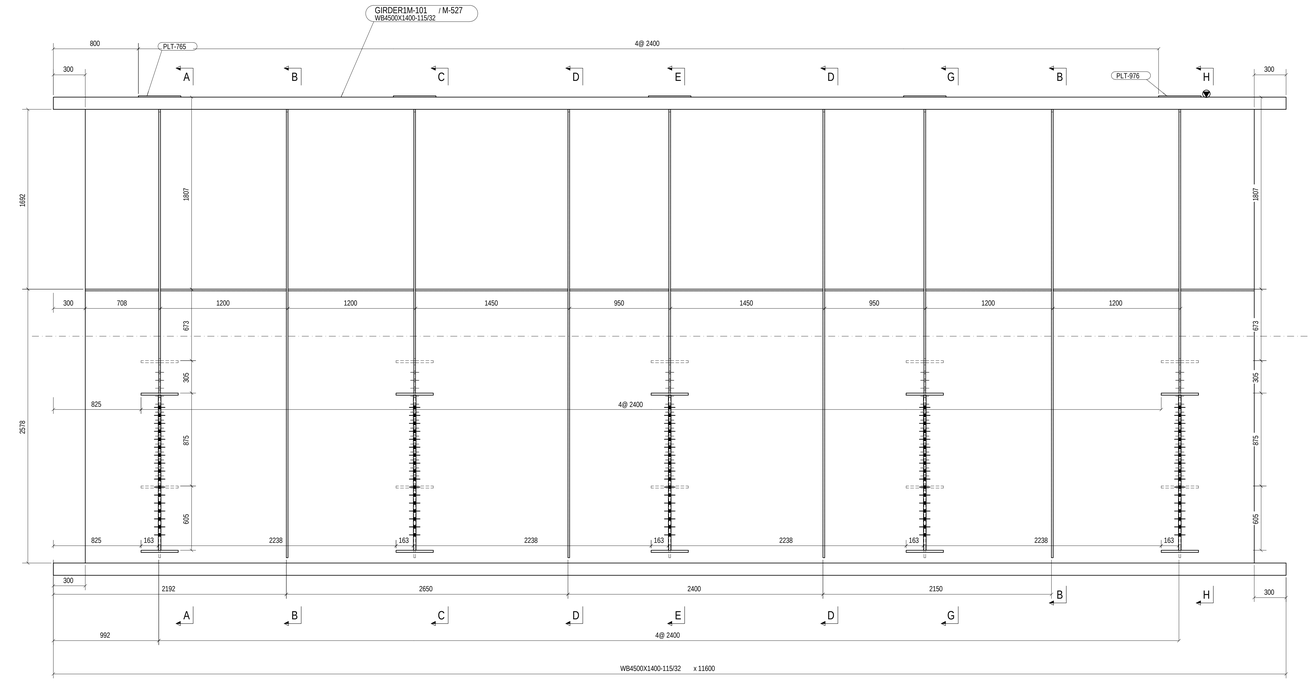

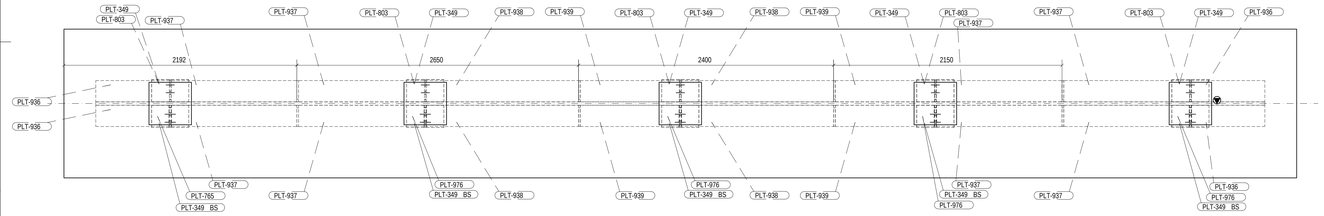

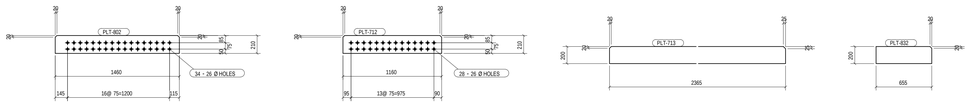

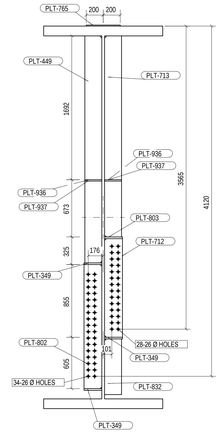

A - A

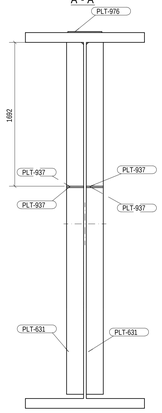

B - B

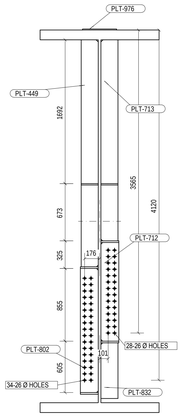

C - C

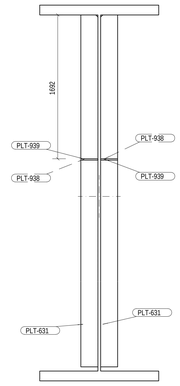

D - D

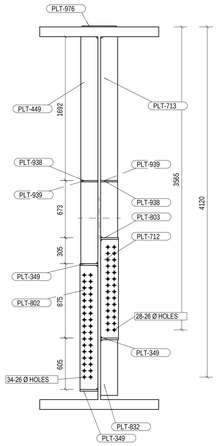

E - E

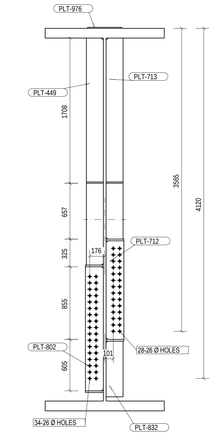

G - G

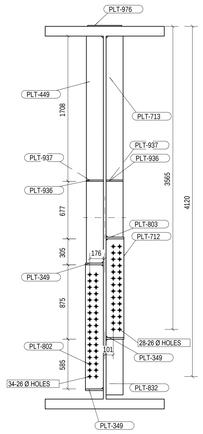

H - H

NOTES:-

FOR ASSEMBLY DRAWING REFER PRINCIPAL DRAWING MENTIONED IN GMS

DRAWN NUMBER	ITEM NUMBER	DESCRIPTION	STD	DRAWING NUMBER	ITEM NO / VAR NO	MATERIAL CODE / MATERIAL SPECN	KIND / CH	UNIT WEIGHT / QUANTITY		CG / ZONE
	19	END COVERING DETAIL FOR END PIECE		3-35-211-02772			No	457.500	1	
	18	LIFTING EYE		3-35-211-05087			No	26.795	8	
	17	PLATE-12 400.0x400.0		PLT-976		15-011-132 IS2062E250AFe410W	No	15.072	4	
	16	PLATE-16 200.0x934.0		PLT-939		15-011-026 IS2062E250AFe410W	No	23.462	4	
	15	PLATE-16 200.0x1434.0		PLT-938		15-011-026 IS2062E250AFe410W	No	36.022	4	
	14	PLATE-16 200.0x1184.0		PLT-937		15-011-026 IS2062E250AFe410W	No	29.742	8	
	13	PLATE-16 200.0x692.0		PLT-936		15-011-026 IS2062E250AFe410W	No	17.383	4	
	12	PLATE-16 200.0x655.0		PLT-832		15-011-026 IS2062E250AFe410W	No	16.428	5	
	11	PLATE-20 210.0x350.0		PLT-803		15-011-150 IS2062E250AFe410W	No	11.539	5	
	10	PLATE-25 210.0x1460.0		PLT-802		15-011-081 IS2062E250BFe410W	No	60.092	5	
	9	PLATE-12 400.0x400.0		PLT-765		15-011-132 IS2062E250AFe410W	No	15.072	4	
	8	PLATE-16 200.0x2365.0		PLT-713		15-011-026 IS2062E250AFe410W	No	59.344	8	
	7	PLATE-16 210.0x1160.0		PLT-712		15-011-026 IS2062E250AFe410W	No	30.546	5	
	6	PLATE-16 200.0x4220.0		PLT-631		15-011-026 IS2062E250AFe410W	No	105.967	8	
	5	PLATE-16 200.0x3570.0		PLT-449		15-011-026 IS2062E250AFe410W	No	57.006	5	
	4	PLATE-20 210.0x350.0		PLT-349		15-011-150 IS2062E250AFe410W	No	11.539	15	
	3	PLATE-32 4270x11600		M-527xWEB		15-011-130 IS2062E250BFe410W	No	11798.863	1	
	2	PLATE-115 1400X11600		M-527xTFL		15-911-958 BSEN10025_3GrS420N	No	14660.659	1	
	1	PLATE-115 1400X11600		M-527xBFL		15-911-958 BSEN10025_3GrS420N	No	14660.659	1	

CAUTION: The information on this document is the property of BHAVAT HEAVY ELECTRICALS LTD and must not be used directly or indirectly in any way detrimental to the interests of the company.

TYPE OF PRODUCT OR NAME OF CUSTOMER/PROJECT

BHEL

Bharat Heavy Electricals Ltd
UNIT : HIGH PRESSURE BOILER PLANT
TIRUCHIRAPALLI - 620014

	NAME	SIGNATURE	DATE
DRN	SHAMA RAJ.P		28.03.2017
CHD	SARASHIJIT		30.03.2017
APPD	J SOMU		31.03.2017

BH-HEP

DEPT: ST
CODE: 122

ALL DIMENSIONS ARE IN MM

PROJECTION

SCALE: NTS

WEIGHT (Kg): 43986.556

REF TO ASSY / OLD DWG

TITLE: GIRDER1M-101

DRAWING NO : 0-35-211-21645

REV

1 No. REQUIRED AS DRAWN MARKED. GIRDER1M-101

0-35-211-21656

DRAWING NO

FOR TOLERANCES OF UNTOLERANCED DIMENSIONS DURING MANUFACTURE REFER PLANT STD. NO TP-023 0299

ASSEMBLY MARK NO	JOINT NO	TOP/ BOTTOM/ REST PLATE	
		BOLT SIZE	QTY
CGIRDER1L-101	-NA-	HSFG:M24x140	8
GIRDER1L-101	-NA-	HSFG:M24x180	240
CGIRDER1R-101	-NA-	HSFG:M24x140	8
CGIRDER1R-101	-NA-	HSFG:M24x180	240
GIRDER1L-101	-NA-	HSFG:M24x80	84
GIRDER1L-101	-NA-	HSFG:M24x100	88
GIRDER1L-101	-NA-	HSFG:M24x110	34
GIRDER1M-101	-NA-	HSFG:M24x80	140
GIRDER1M-101	-NA-	HSFG:M24x100	170
GIRDER1R-101	-NA-	HSFG:M24x80	84
GIRDER1R-101	-NA-	HSFG:M24x100	88
GIRDER1R-101	-NA-	HSFG:M24x110	34
GIRDER2L-101	-NA-	HSFG:M24x80	82
GIRDER2L-101	-NA-	HSFG:M24x90	34
GIRDER2L-101	-NA-	HSFG:M24x100	54
GIRDER2L-101	-NA-	HSFG:M24x140	42
GIRDER2M-101	-NA-	HSFG:M24x80	140
GIRDER2M-101	-NA-	HSFG:M24x90	170
GIRDER2R-101	-NA-	HSFG:M24x80	82
GIRDER2R-101	-NA-	HSFG:M24x90	34
GIRDER2R-101	-NA-	HSFG:M24x100	54
GIRDER2R-101	-NA-	HSFG:M24x140	42
GIRDER3L-101	-NA-	HSFG:M24x80	74
GIRDER3L-101	-NA-	HSFG:M24x90	34
GIRDER3L-101	-NA-	HSFG:M24x100	12
GIRDER3L-101	-NA-	HSFG:M24x140	42
GIRDER3M-101	-NA-	HSFG:M24x80	80
GIRDER3M-101	-NA-	HSFG:M24x90	170
GIRDER3R-101	-NA-	HSFG:M24x80	74
GIRDER3R-101	-NA-	HSFG:M24x90	34
GIRDER3R-101	-NA-	HSFG:M24x100	12
GIRDER3R-101	-NA-	HSFG:M24x140	42
GIRDER4L-101	-NA-	HSFG:M24x80	102
GIRDER4L-101	-NA-	HSFG:M24x100	12
GIRDER4L-101	-NA-	HSFG:M24x110	34
GIRDER4M-101	-NA-	HSFG:M24x80	210
GIRDER4R-101	-NA-	HSFG:M24x80	102
GIRDER4R-101	-NA-	HSFG:M24x100	12
GIRDER4R-101	-NA-	HSFG:M24x110	34

BOLT SUMMARY		
SL NO	BOLT SIZE & 1"WASHER"	QTY
1	HSFG:M24x80	1254
2	HSFG:M24x90	476
3	HSFG:M24x100	502
4	HSFG:M24x110	136
5	HSFG:M24x140	184
6	HSFG:M24x180	480
7	TOTAL	3032

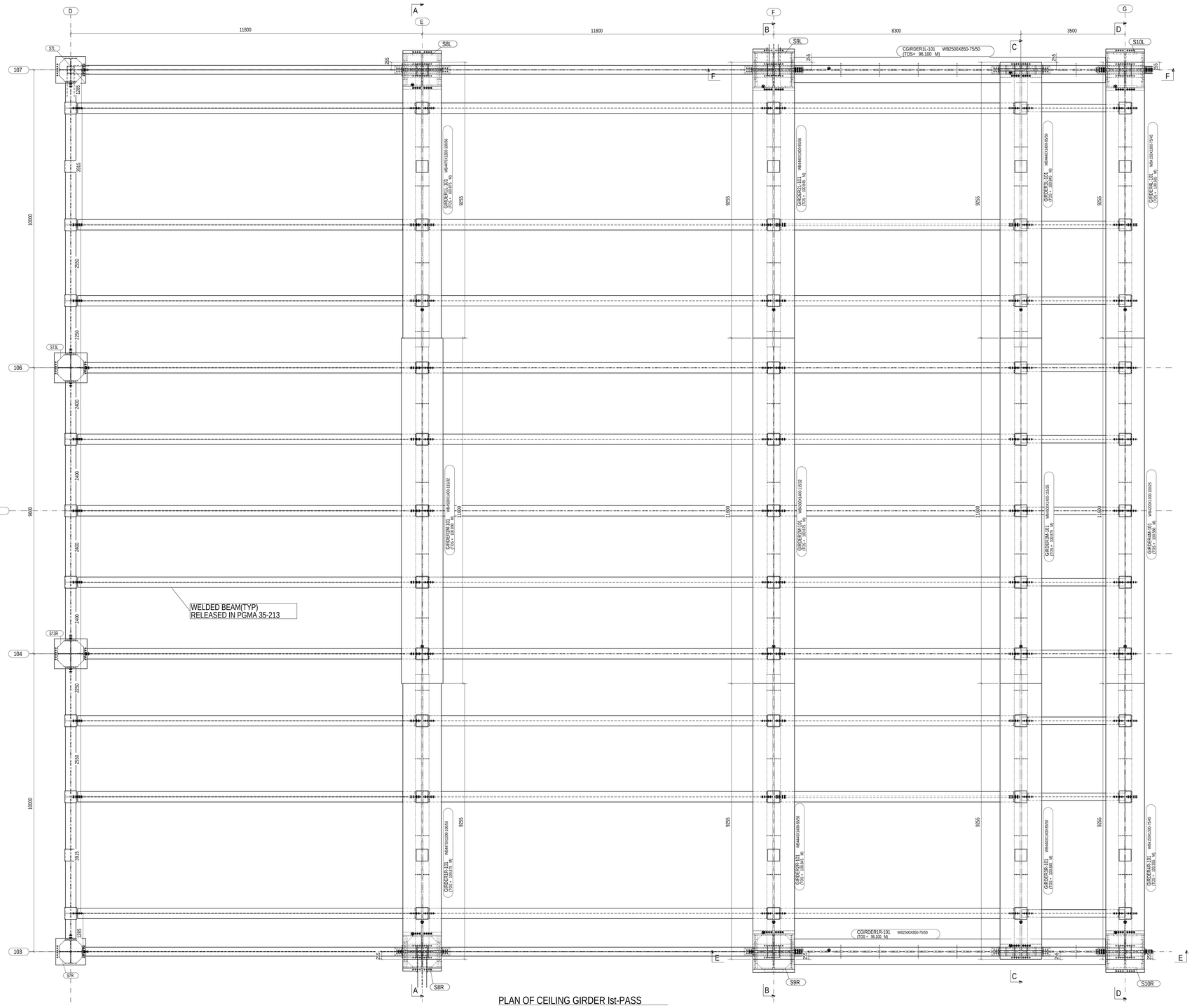

LEGEND:-

1) T.O.S : TOP OF STEEL

2) WB : WELDED BEAM

NOTES:-

1) FOR GIRDER WELDING DETAILS REFERE DRAWING NOS. 1-35-211-15799 AND 1-35-211-15817.

2) THIS DRAWING SHALL BE READ ALONG WITH DRG NOS. 0-35-212-21658 AND 0-35-212-21659.

3) FOR SECTION VIEWS REFER DRAWING NO. 0-35-211-21657.

4) FOR KEY PLAN OF COLUMN REFER DRG NO. 0-35-110-21352.

VARIANT NUMBER	ITEM NUMBER	DESCRIPTION	STD	DRAWING NUMBER	ITEM NO / VAR NO	MATERIAL CODE / MATERIAL SPECN	AK/JP	UNIT	UNIT WEIGHT / QUANTITY	CG ZONE
	14	GIRDER4R-101 WB4150X1300-75/45		0-35-211-21655				No	33230.056 1	
	13	GIRDER4M-101 WB4200X1300-100/25		0-35-211-21654				No	34915.512 1	
	12	GIRDER4L-101 WB4150X1300-75/45		0-35-211-21653				No	33230.054 1	
	11	GIRDER3R-101 WB4440X1400-85/50		0-35-211-21652				No	39493.665 1	
	10	GIRDER3M-101 WB4500X1400-115/25		0-35-211-21651				No	41316.135 1	
	9	GIRDER3L-101 WB4440X1400-85/50		0-35-211-21650				No	39493.663 1	
	8	GIRDER2R-101 WB4440X1400-85/56		0-35-211-21649				No	41446.022 1	
	7	GIRDER2M-101 WB4500X1400-115/32		0-35-211-21648				No	43932.618 1	
	6	GIRDER2L-101 WB4440X1400-85/56		0-35-211-21647				No	41446.020 1	
	5	GIRDER1R-101 WB4470X1300-100/56		0-35-211-21646				No	42692.066 1	
	4	GIRDER1M-101 WB4500X1400-115/32		0-35-211-21645				No	43986.556 1	
	3	GIRDER1L-101 WB4470X1300-100/56		0-35-211-21644				No	42692.064 1	
	2	CGIRDER1R-101 WB2500X850-75/50		0-35-211-21643				No	23347.673 1	
	1	CGIRDER1L-101 WB2500X850-75/50		0-35-211-21642				No	23347.673 1	

CAUTION: The information on this document is the property of BHARAT HEAVY ELECTRICALS LTD and must be used directly or indirectly in any form or manner as may be decided by the company.

TYPE OF PRODUCT
OR NAME OF
CUSTOMER/PROJECT

Bharat Heavy Electricals Ltd
UNIT: HIGH PRESSURE BOILER PLANT
TIRUCHIRAPALLI - 620014

	NAME	SIGNATURE	DATE
DRN	SHAMMA RAJ P		29.03.2017
CHD	SARASHJIT		30.03.2017
APPD	J SOMU		31.03.2017

DEPT	CODE	ALL DIMENSIONS ARE IN MM	PROJECTION	SCALE	WEIGHT (Kg)	REF TO ASSY / OLD DWG
ST	122			NTS	524569.775	

TITLE: ASSY. OF CEILING GIRDER Ist- PASS

DRAWING NO : 0-35-211-21656

REV 0

0-35-212-21658

DRAWING NO

FOR TOLERANCES OF UNTOLERANCED DIMENSIONS DURING MANUFACTURE REFER PLANT STD. NO TP-023 0299

ASSEMBLY MARK NO	JOINT NO	TOP/ BOTTOM/ REST PLATE	
		BOLT SIZE	QTY
CGIRDER2L-101	-NA-	HSFG:M24x140	8
CGIRDER2L-101	-NA-	HSFG:M24x150	180
CGIRDER2R-101	-NA-	HSFG:M24x140	8
CGIRDER2R-101	-NA-	HSFG:M24x150	180
CGIRDER3L-101	-NA-	HSFG:M24x140	8
CGIRDER3L-101	-NA-	HSFG:M24x150	180
CGIRDER3R-101	-NA-	HSFG:M24x140	8
CGIRDER3R-101	-NA-	HSFG:M24x150	180
GIRDER5L-101	-NA-	HSFG:M24x80	110
GIRDER5L-101	-NA-	HSFG:M24x100	12
GIRDER5L-101	-NA-	HSFG:M24x110	34
GIRDER5M-101	-NA-	HSFG:M24x80	220
GIRDER5R-101	-NA-	HSFG:M24x80	110
GIRDER5R-101	-NA-	HSFG:M24x100	12
GIRDER5R-101	-NA-	HSFG:M24x110	34
GIRDER6L-101	-NA-	HSFG:M24x80	112
GIRDER6L-101	-NA-	HSFG:M24x90	26
GIRDER6L-101	-NA-	HSFG:M24x100	12
GIRDER6M-101	-NA-	HSFG:M24x80	230
GIRDER6R-101	-NA-	HSFG:M24x80	112
GIRDER6R-101	-NA-	HSFG:M24x90	26
GIRDER6R-101	-NA-	HSFG:M24x100	12
GIRDER7L-101	-NA-	HSFG:M24x80	72
GIRDER7L-101	-NA-	HSFG:M24x90	58
GIRDER7L-101	-NA-	HSFG:M24x100	12
GIRDER7M-101	-NA-	HSFG:M24x80	140
GIRDER7M-101	-NA-	HSFG:M24x90	80
GIRDER7R-101	-NA-	HSFG:M24x80	72
GIRDER7R-101	-NA-	HSFG:M24x90	58
GIRDER7R-101	-NA-	HSFG:M24x100	12

BOLT SUMMARY		
SL NO	BOLT SIZE & 1"WASHER"	QTY
1	HSFG:M24x80	1178
2	HSFG:M24x90	248
3	HSFG:M24x100	72
4	HSFG:M24x110	68
5	HSFG:M24x140	32
6	HSFG:M24x150	720
7	TOTAL	2318

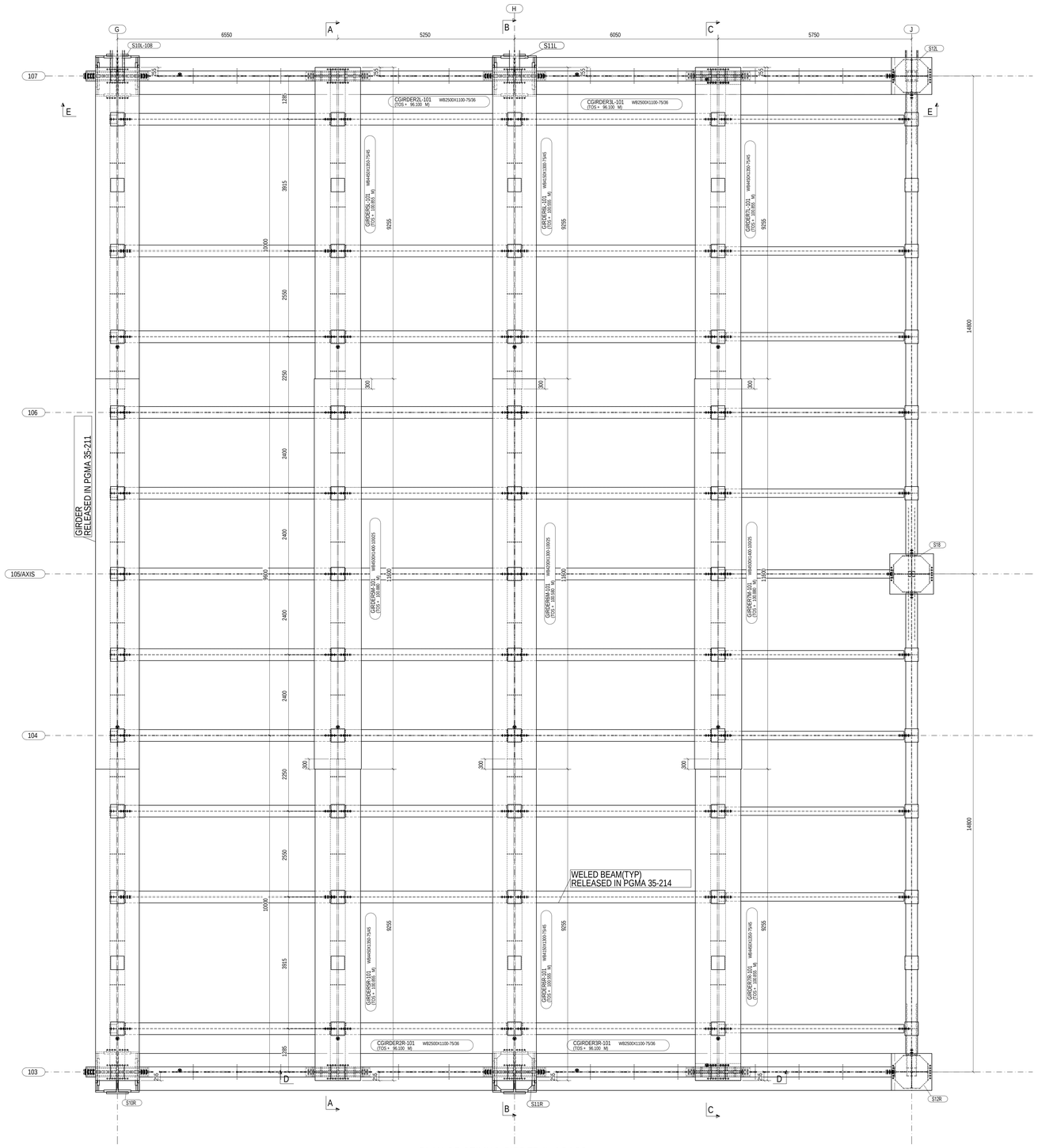

PLAN OF CEILING GIRDER IInd-PASS

LEGEND:-

1) T.O.S : TOP OF STEEL

2) WB : WELDED BEAM

NOTES:-

1) FOR GIRDER WELDING DETAILS REFERE DRAWING NOS. 1-35-211-15799 AND 1-35-211-15817.

2) THIS DRAWING SHALL BE READ ALONG WITH DRG NOS. 0-35-211-21656 AND 0-35-211-21657.

3) FOR SECTION VIEWS REFER DRAWING NO. 0-35-212-21659.

4) FOR KEY PLAN OF COLUMN REFER DRG NO. 0-35-110-21352.

DRAWING NUMBER	ITEM NUMBER	DESCRIPTION	STD	DRAWING NUMBER	ITEM NO / VAR NO	MATERIAL CODE / MATERIAL SPECN	AUOM / DI	MAT / QUANTITY	UNIT WEIGHT	CG	ZONE
	13	GIRDER7R-101 WB4450X1350-75/45		0-35-212-21672			No	1	35231.103		
	12	GIRDER7M-101 WB4500X1400-100/25		0-35-212-21671			No	1	37544.980		
	11	GIRDER7L-101 WB4450X1350-75/45		0-35-212-21670			No	1	35231.101		
	10	GIRDER6R-101 WB4150X1300-75/45		0-35-212-21669			No	1	33219.015		
	9	GIRDER6M-101 WB4200X1300-100/25		0-35-212-21668			No	1	34949.110		
	8	GIRDER6L-101 WB4150X1300-75/45		0-35-212-21667			No	1	33219.014		
	7	GIRDER5R-101 WB4450X1350-75/45		0-35-212-21666			No	1	35272.463		
	6	GIRDER5M-101 WB4500X1400-100/25		0-35-212-21665			No	1	37553.583		
	5	GIRDER5L-101 WB4450X1350-75/45		0-35-212-21664			No	1	35272.461		
	4	CGIRDER3R-101 WB2500X1100-75/36		0-35-212-21663			No	1	23718.314		
	3	CGIRDER3L-101 WB2500X1100-75/36		0-35-212-21662			No	1	23718.314		
	2	CGIRDER2R-101 WB2500X1100-75/36		0-35-212-21661			No	1	23310.409		
	1	CGIRDER2L-101 WB2500X1100-75/36		0-35-212-21660			No	1	23310.409		

CAUTION: The information on this document is the property of BHARAT HEAVY ELECTRICALS LTD and shall not be used directly or indirectly in any way prejudicial to the interests of the company.

TYPE OF PRODUCT
OR NAME OF
CUSTOMER/PROJECT

Bharat Heavy Electricals Ltd
UNIT: HIGH PRESSURE BOILER PLANT
TIRUCHIRAPALLI - 620014

	NAME	SIGNATURE	DATE
DRN	SHAMMA RAJ.P		29.03.2017
CHD	SARASHJIT		30.03.2017
APPD	J.SOMU		31.03.2017

DIS-002

DEPT: ST
CODE: 122
ALL DIMENSIONS ARE IN MM
PROJECTION
SCALE: NTS
WEIGHT (Kg): 411550.275
REF TO ASSY / OLD DWG

TITLE: ASSY. OF CEILING GIRDER IInd- PASS

DRAWING NO : 0-35-212-21658

REV: 0

0-35-212-21659

ON DRAWING

FOR TOLERANCES OF UNTOLERANCED DIMENSIONS DURING MANUFACTURE REFER PLANT STD. NO TP-023-0299

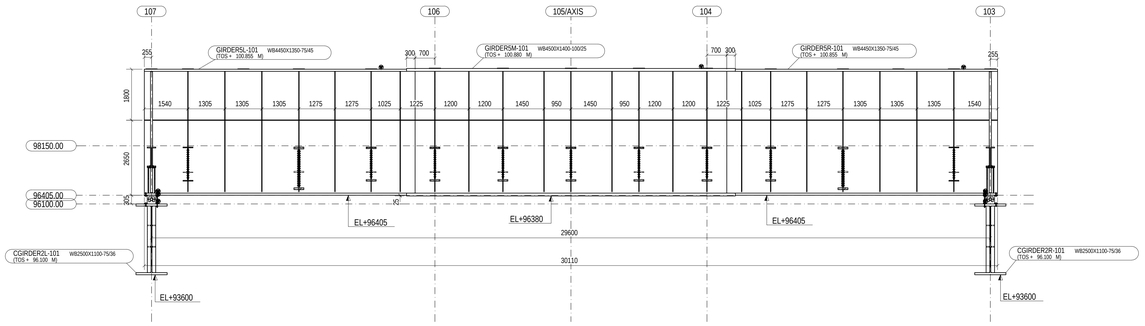

A - A

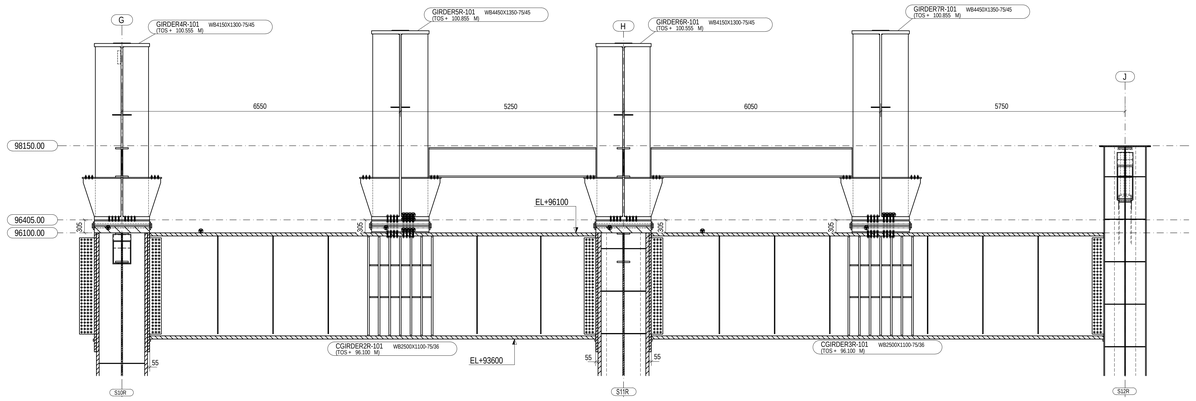

D - D

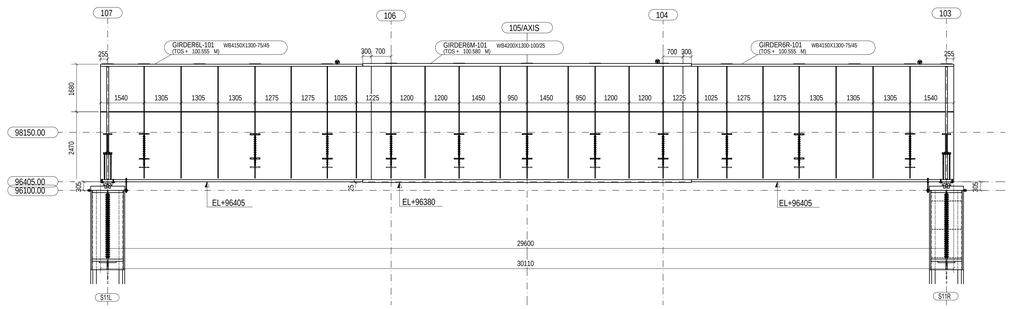

B - B

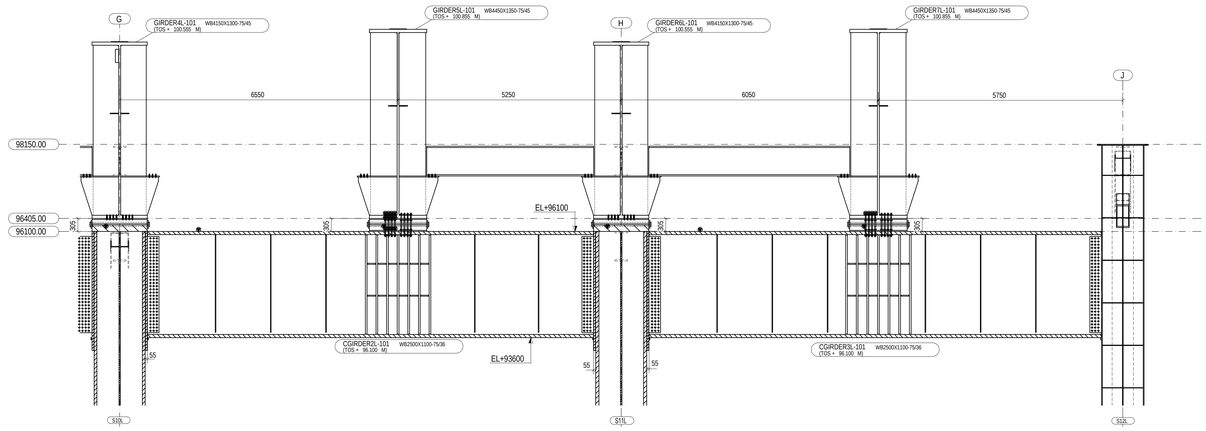

E - E

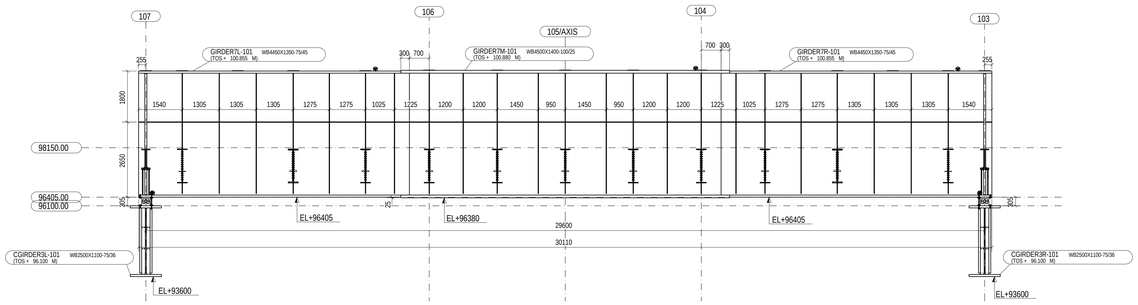

C - C

NOTES:-

1) FOR PLAN OF CEILING GIRDER AND NOTES REFER DRAWING NO: 1-35-212-21658.

VARIANT NUMBER	ITEM NUMBER	DESCRIPTION	STD	DRAWING NUMBER	ITEM NO	MATERIAL CODE	A/UP	UNIT	UNIT WEIGHT	CG	ZONE
					VAR NO	MATERIAL SPECN		DI	QUANTITY		

TYPE OF PRODUCT
OR NAME OF
CUSTOMER/PROJECT

CAUTION: The information on this document is the property of BHARAT HEAVY ELECTRICALS LTD and not to be used directly or indirectly in any manner to the detriment of the company.

Bharat Heavy Electricals Ltd
UNIT: HIGH PRESSURE BOILER PLANT
TIRUCHIRAPALLI - 620014

	NAME	SIGNATURE	DATE
DRN	SHAMINA RAJ P		29.03.2017
CHD	SARASHJIT		30.03.2017
APPD	J SOMU		31.03.2017

DEPT	ALL DIMENSIONS ARE IN MM	PROJECTION	SCALE	WEIGHT (Kg)	REF TO 4337 / OLD DWG
ST			NTS		
CODE 122					

TITLE: VIEWS. OF CEILING GIRDER IInd- PASS

DRAWING NO : 0-35-212-21659

REV 0

WB-SKETCH-1

DRAWING NO:

FOR TOLERANCES OF UNTOLERANCED DIMENSIONS DURING MANUFACTURE REFER PLANT STD. NO TP 023 0299

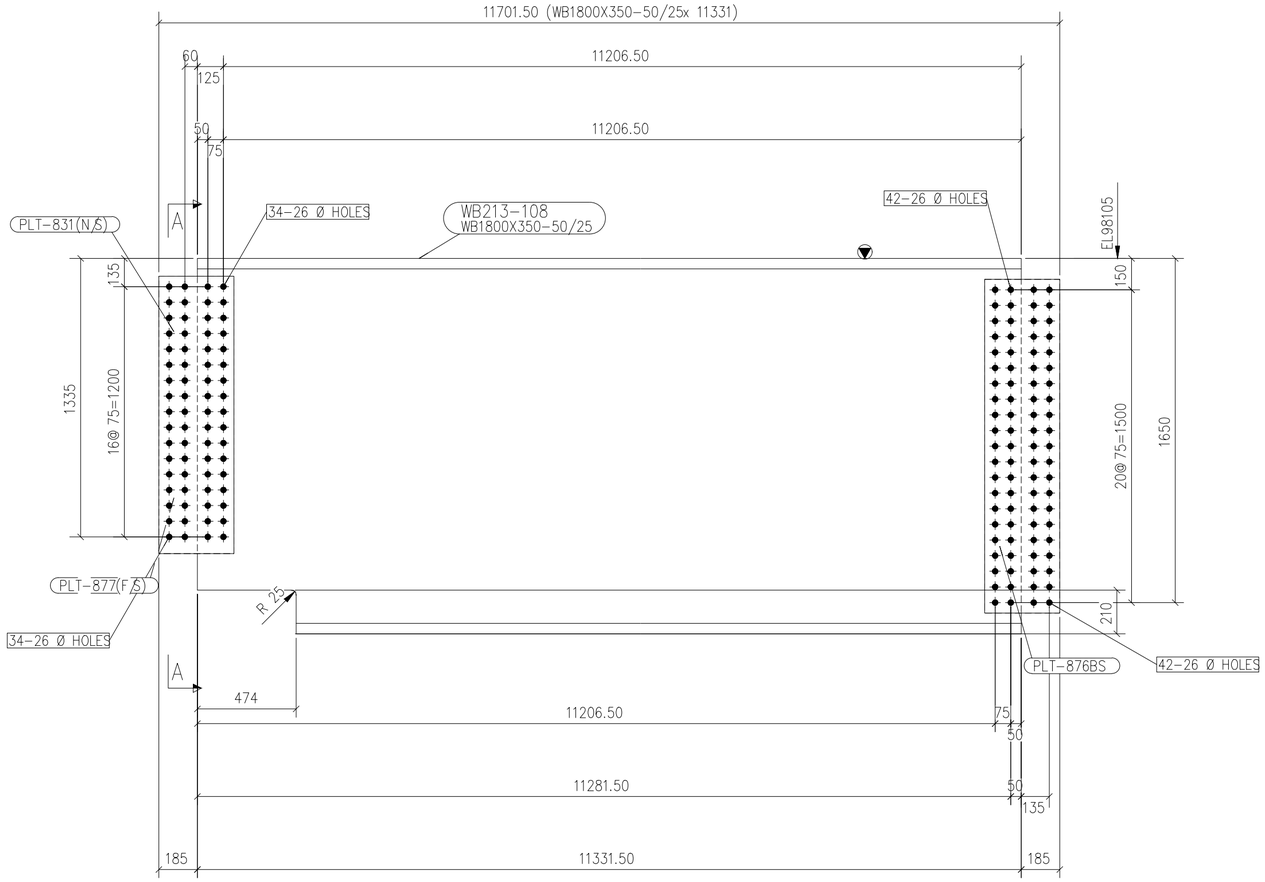

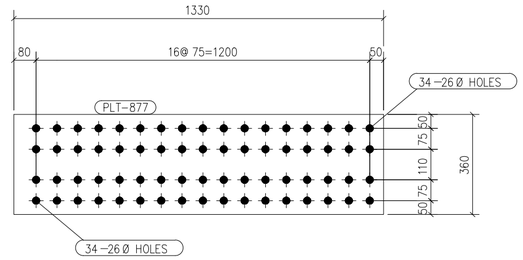

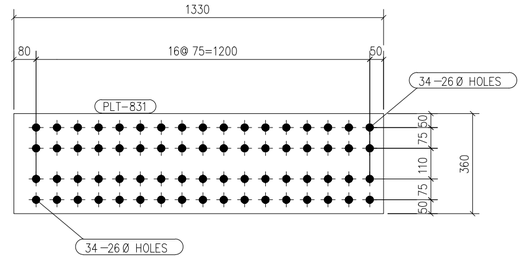

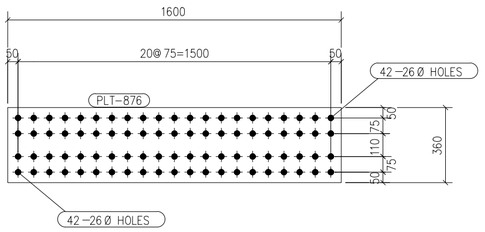

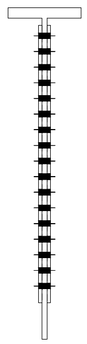

A -A

NOTES:-

FOR ASSEMBLY DRAWING REFER PRINCIPAL DRAWING MENTIONED IN GMS

VARIANT NUMBER	ITEM NUMBER	DESCRIPTION	STD	DRAWING NUMBER	ITEM NO / VAR NO	MATERIAL CODE / MATERIAL SPECN	A/C/P	UNIT / DI	UNIT WEIGHT / QUANTITY	GS	ZONE
	8	NUT HEX Gr.C M24				4130400024		No	0.110 / 4		
	7	BOLT HEX Gr.C M24x100.0				4122124100		No	0.455 / 4		
	6	PLATE-16 360.0x1330.0		PLT-877		15-011-026 IS2062E250A(Fe410W)		No	60.137 / 1		
	5	PLATE-16 360.0x1600.0		PLT-876		15-011-026 IS2062E250A(Fe410W)		No	72.346 / 2		
	4	PLATE-16 360.0x1330.0		PLT-831		15-011-026 IS2062E250A(Fe410W)		No	60.137 / 1		
	3	PLATE-25 1700x11331		M-283xWEB		15-011-045 IS2062 E350BR		No	3780.472 / 1		
	2	PLATE-50 350X11331		M-283xTFL		15-011-052 IS2062 E350BR		No	1556.665 / 1		
	1	PLATE-50 350X10857		M-283xBFL		15-011-052 IS2062 E350BR		No	1491.549 / 1		

CAUTION: The information on this document is the property of BHARAT HEAVY ELECTRICALS LTD. It must not be used directly or indirectly in any way detrimental to the interest of the company.

TYPE OF PRODUCT OR NAME OF CUSTOMER/PROJECT

Bharat Heavy Electricals Ltd
UNIT: HIGH PRESSURE BOILER PLANT
TIRUCHIRAPALLI - 620014
355-052

	NAME	SIGNATURE	DATE
DRN	DEEPAN		06.04.2017
CHD	SAR/ASH		07.04.2017
APPD	J SOMU		08.04.2017

DEPT: ST
CODE: 122
ALL DIMENSIONS ARE IN MM
PROJECTION
SCALE: NTS
WEIGHT (Kg): 7081.057
REF TO ASSY / OLD DWG

TITLE: WB213-108

DRAWING NO: WB-SKETCH-1

REV

3 No's. REQUIRED AS DRAWN MARKED. WB213-108

WB-SKETCH-2

DRAWING NO:

FOR TOLERANCES OF UNTOLERANCED DIMENSIONS DURING MANUFACTURE REFER PLANT STD. NO TP 023 0299

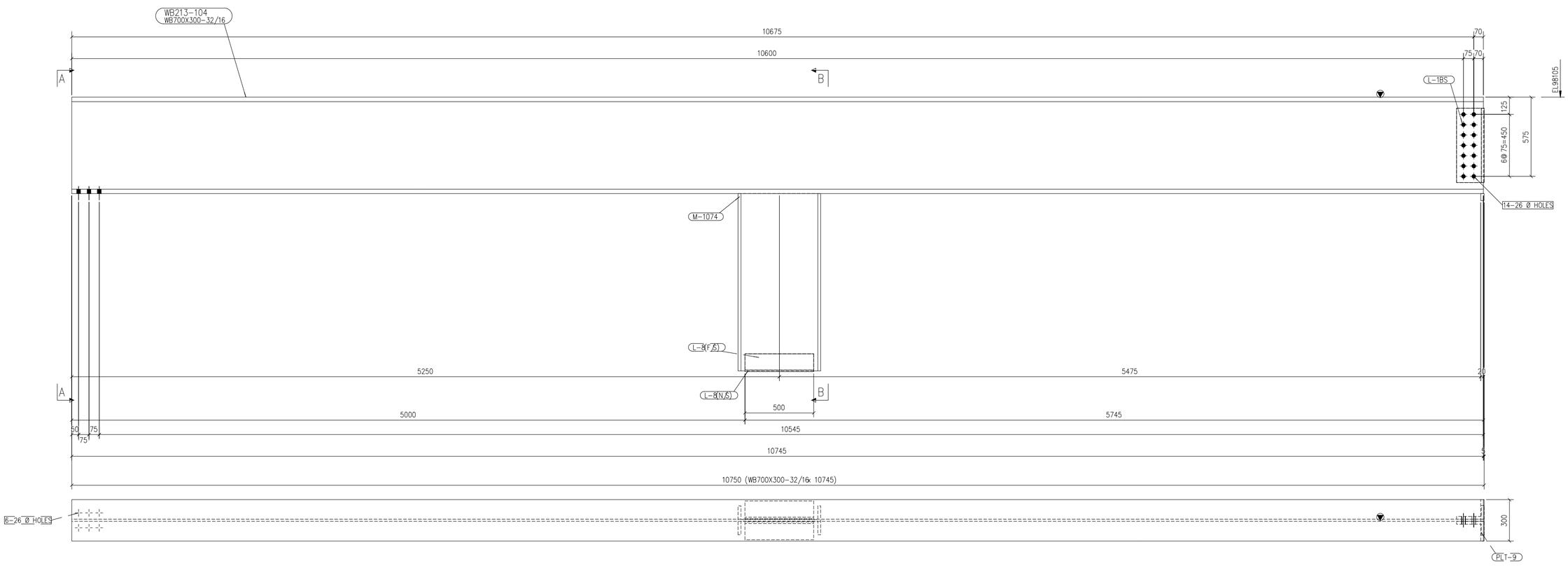

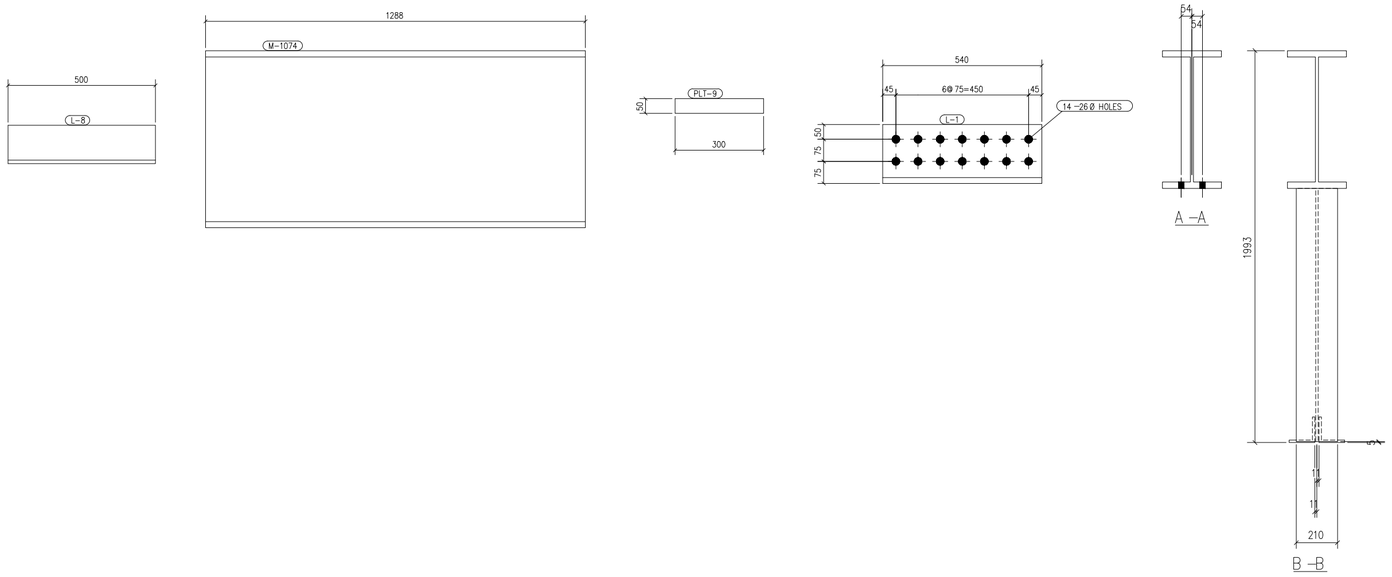

NOTES:-

FOR ASSEMBLY DRAWING REFER PRINCIPAL DRAWING MENTIONED IN GMS

VARIANT NUMBER	ITEM NUMBER	DESCRIPTION	STD	DRAWING NUMBER	ITEM NO / VAR NO	MATERIAL CODE / MATERIAL SPECN	A/C/P	UNIT / DI	UNIT WEIGHT / QUANTITY	GS	ZONE
	9	NUT HEX Gr.C M24				4130400024		No	0.110 / 2		
	8	BOLT HEX Gr.C M24x100.0				4122124100		No	0.455 / 2		
	7	PLATE-25 50.0x300.0		PLT-9		15-011-081 / IS2062E250B(Fe410W)		No	2.944 / 1		
	6	ISMB600 1288		M-1074		15-009-017 / IS2062E250A(Fe410W)		No	158.424 / 1		
	5	PLATE-16 636x10745		M-995xWEB		15-011-041 / IS2062 E350BR		No	858.328 / 1		
	4	ISA130X130X12 500		L-8		15-013-171 / IS2062E250A(Fe410W)		No	11.750 / 2		
	3	ISA200X200X20 540		L-1		15-013-154 / IS2062E250A(Fe410W)		No	32.400 / 2		
	2	PLATE-32 300X10745		M-995xTFL		15-011-047 / IS2062 E350BR		No	809.743 / 1		
	1	PLATE-32 300X10745		M-995xBFL		15-011-047 / IS2062 E350BR		No	809.743 / 1		

CAUTION: The information on this document is the property of BHARAT HEAVY ELECTRICALS LTD. It must not be used directly or indirectly in any way detrimental to the interest of the company.

TYPE OF PRODUCT OR NAME OF CUSTOMER/PROJECT

Bharat Heavy Electricals Ltd
UNIT: HIGH PRESSURE BOILER PLANT
TIRUCHIRAPALLI - 620014

355-052

	NAME	SIGNATURE	DATE
DRN	DEEPAN		06.04.2017
CHD	SAR/ASH		07.04.2017
APPD	J SOMU		08.04.2017

DEPT: ST
CODE: 122
ALL DIMENSIONS ARE IN MM
PROJECTION
SCALE: NTS
WEIGHT (Kg): 2728.612
REF TO ASSY / OLD DWG

TITLE: WB213-104

DRAWING NO: WB-SKETCH-2

REV

2 No's. REQUIRED AS DRAWN MARKED. WB213-104

WB-SKETCH-3

DRAWING NO:

FOR TOLERANCES OF UNTOLERANCED DIMENSIONS DURING MANUFACTURE REFER PLANT STD. NO TP 023 0299

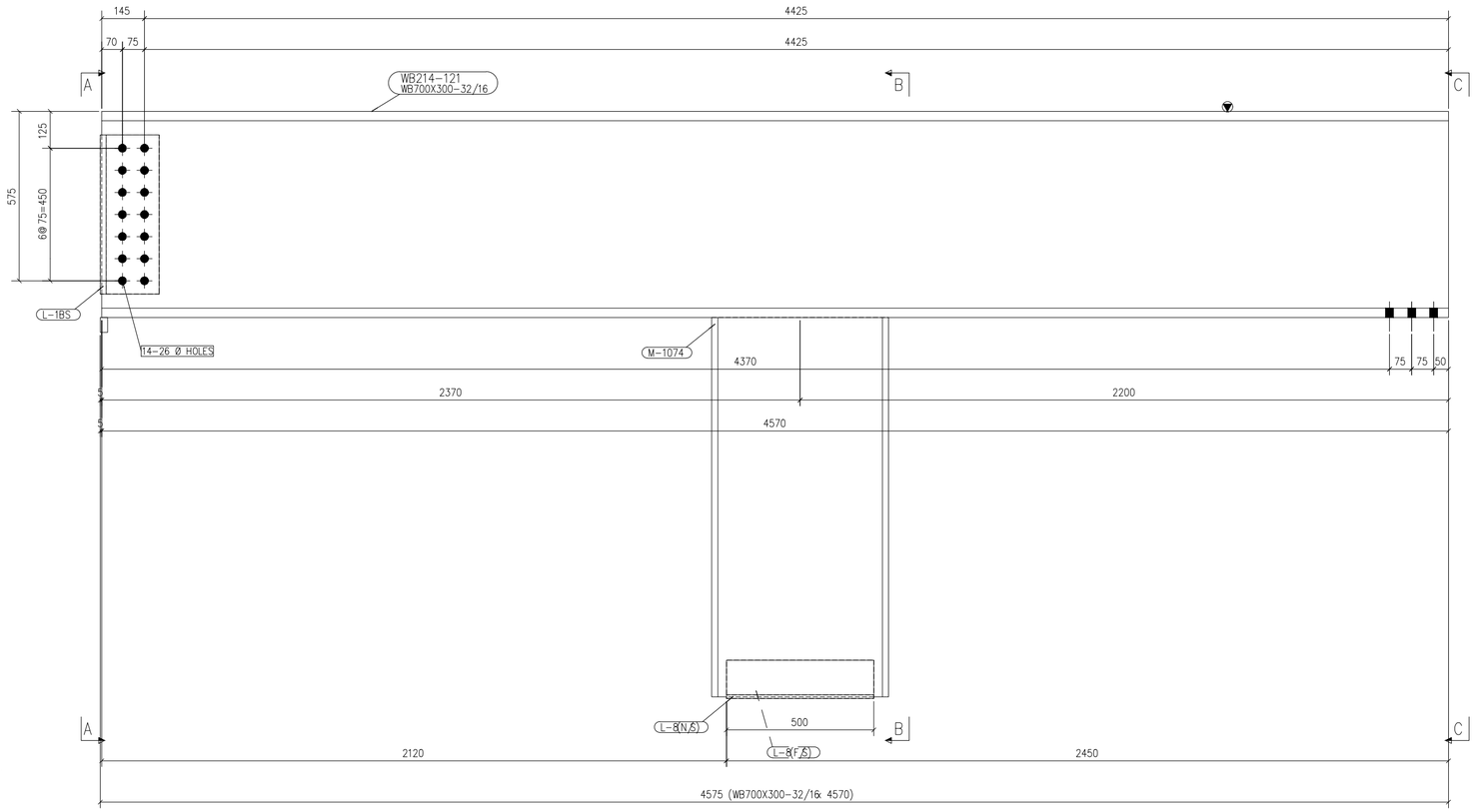

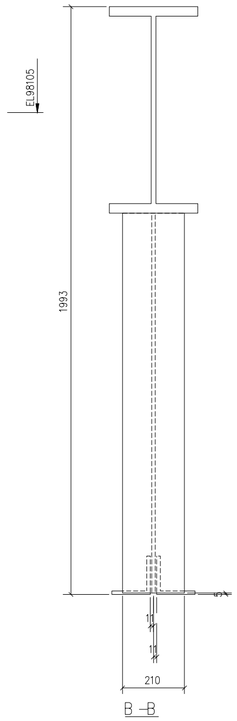

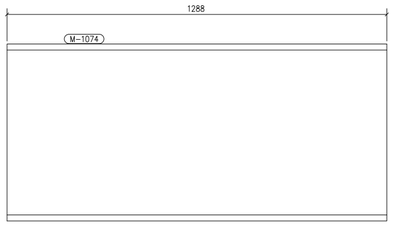

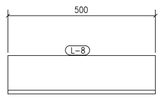

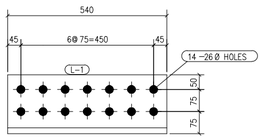

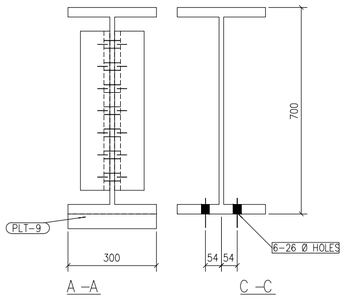

NOTES:-

FOR ASSEMBLY DRAWING REFER PRINCIPAL DRAWING MENTIONED IN GMS

VARIANT NUMBER	ITEM NUMBER	DESCRIPTION	STD	DRAWING NUMBER	ITEM NO / VAR NO	MATERIAL CODE / MATERIAL SPECN	A/C/P	UNIT / DI	UNIT WEIGHT / QUANTITY	GS	ZONE
	9	NUT HEX Gr.C M24				4130400024		No	0.110 / 2		
	8	BOLT HEX Gr.C M24x100.0				4122124100		No	0.455 / 2		
	7	PLATE-25 50.0x300.0		PLT-9		15-011-081 / IS2062E250B(Fe410W)		No	2.944 / 1		
	6	ISMB600 1288		M-1074		15-009-017 / IS2062E250A(Fe410W)		No	158.424 / 1		
	5	PLATE-16 636x4570		M-996xWEB		15-011-041 / IS2062 E350BR		No	365.059 / 1		
	4	ISA130X130X12 500		L-8		15-013-171 / S2062E250A(Fe410W)		No	11.750 / 2		
	3	ISA200X200X20 540		L-1		15-013-154 / S2062E250A(Fe410W)		No	32.400 / 2		
	2	PLATE-32 300X4570		M-996xTFL		15-011-047 / IS2062 E350BR		No	344.395 / 1		
	1	PLATE-32 300X4570		M-996xBFL		15-011-047 / IS2062 E350BR		No	344.395 / 1		

CAUTION: The information on this document is the property of BHARAT HEAVY ELECTRICALS LIMITED and must not be used directly or indirectly in any way detrimental to the interest of the company.

TYPE OF PRODUCT
OR NAME OF
CUSTOMER/PROJECT

Bharat Heavy Electricals Ltd
UNIT: HIGH PRESSURE BOILER PLANT
TIRUCHIRAPALLI – 620014

355-052

	NAME	SIGNATURE	DATE
DRN	DEEPAN		06.04.2017
CHD	SAR/ASH		07.04.2017
APPD	J SOMU		08.04.2017

DEPT: ST
CODE: 122
ALL DIMENSIONS ARE IN MM
PROJECTION
SCALE: NTS
WEIGHT (Kg): 1304.647
REF TO ASSY / OLD DWG

TITLE: WB214-121

DRAWING NO : WB-SKETCH-3

REV

2 No's. REQUIRED AS DRAWN MARKED. WB214-121